第 47 屆國際技能競賽第 2 階段國手選拔賽
競賽試題(說明)

壹、競賽規則

機器人為工業 4.0 發展最為重要之生產設備之一，所以機器人技術也為各國所重視，而在產業應用中以機械手臂之使用最為普及。根據 IFR 國際機器人聯盟的資料顯示，目前全球每年新裝機的工業機器人數量達到 40 萬台左右，並且這個數量仍在穩定成長中。因此，國際技能競賽組織 (WSI) 將機器人系統整合職類納入為正式競賽的賽項。本職類自 2021 年開始納入國內正式的競賽，並自 2022 年開始辦理分區賽，而成為常規的比賽。本職類的競賽原則上比照國際技能競賽機器人系統整合職類之規則，**分區賽與全國賽公開試題占總分約 70%，未公開試題約占 30%**，公開試題於比賽時約改變 30%；**二階國手選拔賽則採國際賽運作模式，即英文試題、僅公告參考試題，正式試題不予公告**。競賽的內容強調機器人的系統整合運用能力，因此除機械手臂之裝設、調校、維護與使用外，選手尚須具備相關工具的應用能力 (例如：以模擬器在實作之前先進行模擬以確認所規劃工作之可行性、自行設計使用者介面之能力、週邊感測器之整合運用能力、運用工具事先檢核負載之負荷能力…等) 及進行工作規劃、文件製作與對客戶進行簡報之能力，於工作過程中並應隨時注意符合工作安全規範。比賽進行的方式，係由兩位選手分工合件，依據裁判長所主持裁判會議依現場設備及機械手臂之狀況所共同討論之命題進行任務解決。命題原則以現有場地做題目改變，如改變夾取不同形狀大小或在外觀上有瑕疵之工件、或運動軌跡規劃、**或智慧判斷能力**、**或循跡運動能力**、**或影像辨識能力**、**或機械手臂之夾取功能**…等等皆為可能的命題方向，以挑戰選手的臨時應變能力。

一、比賽題目(即參與比賽的機械手臂競賽平台應具備下列功能)

機械手臂依規定上場參加進行比賽。機械手臂應具備之功能為夾持或搬運物體工件，其單一物體工件之重**最高 500 克重**。且選手應具有運動軌跡規劃之能力，即利用一台機械手臂本體，全自動夾具夾持或搬運物體，以及外觀瑕疵或物件外形辨識功能，使物體到達特定地點或特定區域的能力，並具有依題目需求智慧判斷所要挾持物體之數量。在裁判之指示後出發，依競賽規則機械手臂夾具夾取所需之物體或工件，使物體或工件到達特定地點或特定區域的能力。除手臂之操控外，參賽選手並應具備繪製機具配置圖、工作規劃與分析、設計使用者操作介面、週邊裝置裝設能力、文件製作與簡報之能力。

二、比賽辦法

(一)競賽設備：

此次競賽所使用之機械手臂、電動夾爪 (包含指部)、相機裝置均由大會準備，使用 FANUC ER-4iA 手臂搭配 FANUC iRVision_2D 相機與 Schunk EGP40 電氣夾爪。各項競賽設備均在如圖 1 所示之工作櫃中作業。競賽前機械手臂已裝設於工作櫃內，其餘裝置於競賽開始後由選手裝設。

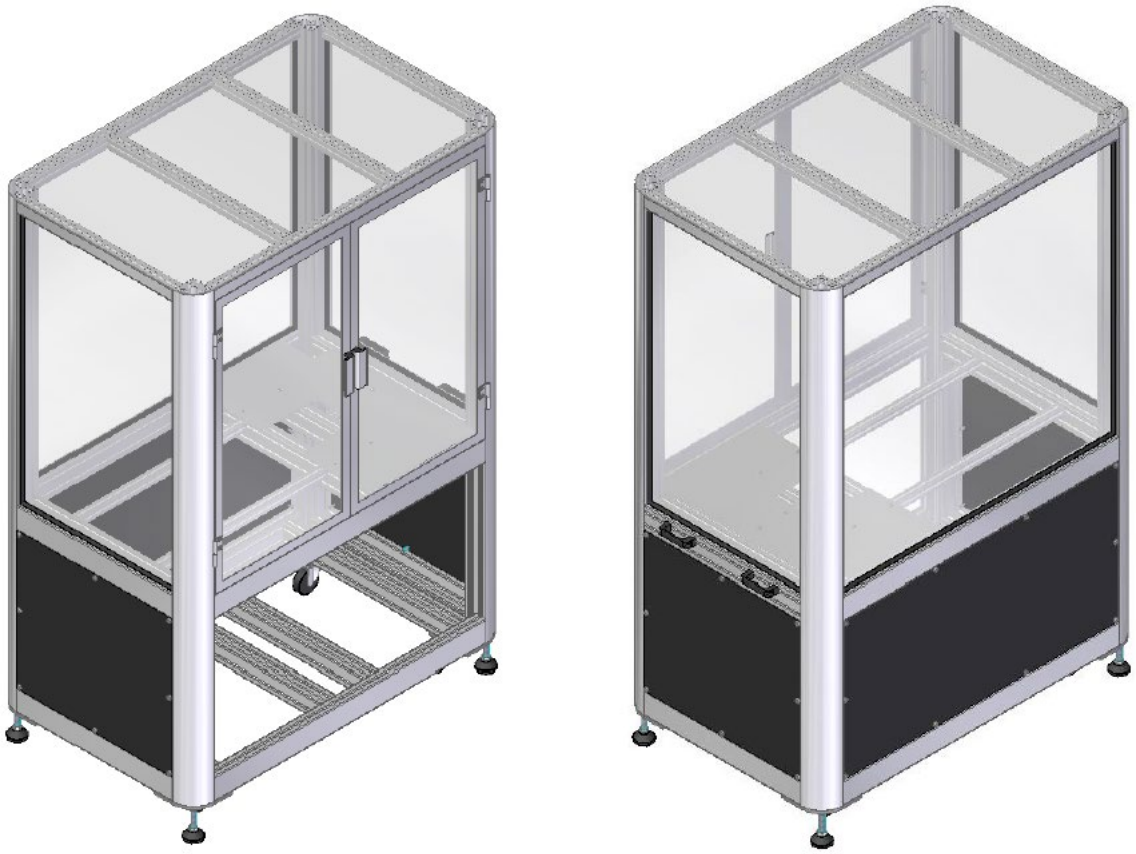

圖一：機械手臂工作櫃外觀圖

本次競賽所使用之工件均為秘密工件，部分治具亦為秘密方式運用。所有選手均於競賽首日熟悉場地時同時看到並現場應變。

競賽用電腦由大會統一提供。競賽電腦與機器人控制器之 IP 於競賽首日公告給選手知悉。競賽用電腦內之預載軟體包括：

1. Windows 10 作業系統。
2. Microsoft SharePoint Designer 試用版。
3. Microsoft Office 2016 試用版。
4. Autodesk Inventor 2023 試用版。
5. Roboguide V9。
6. Payload Checker。

各組工作區域範圍均為 3m × 4m。工作區域配置一張電腦暨文書工作桌、一個機器人工作櫃(如圖一所示)。工作櫃中工作區枱面大小約 67cm×64cm，高度約 80cm。工作櫃枱面周圍必要時會由選手負責裝置若干開關或感測裝置，可能包括按鈕開關 (安裝高度約距枱面 10~20cm)。競賽期間機械手臂應能達到枱面上任一點或能使按鈕開關作動。工作區域電源配置包括 110V 電源、220V 電源。

貳、競賽試題

本競賽之試題依評分時間共分為三個模組，加上機器人基本功能測試，共會進行四次評分。三個模組分別為基本任務、延伸任務一、延伸任務二，三者具有一定的關聯性。任務內容為機械手臂應達成之工作，包括夾取工件、釋放工件、移動至定點、與週邊裝置整合運用…等個別動作的組合。為求競賽之公平性，各項任務均於競賽現場公布。競賽之進行，由兩位選手分工合作，共同完成試題之要求項目。所有任務均應符合數位雙生 (Digital Twin) 之精神，即參賽選手對於各項任務，應先於電腦端之手臂軟體開發程式並完成正確之模擬，方可載入到機械手臂之控制器執行。而且模擬程式中之各項配置應與手臂現場之配置一致。若手臂現場端有作任何配置的修改，電腦端也必須進行同步修改。

此外，選手應為各項任務建立適當的人機介面。人機介面之評分將與延伸任務二之評分同時進行。

第一天下午競賽說明(機械手臂競賽平台組裝及基本功能測試)

競賽選手一位安裝機台，包括配線、電氣夾爪裝設、工作枱面治具裝設、機械手臂校正、安全工作範圍設定；一位進行工作枱面規劃與手臂安全工作範圍設定、夾爪/指部/大會未提供圖檔之工件的 CAD 圖繪製與匯入，並協助另一位選手進行手臂校正。工作枱面治具配置需與規劃圖一致。手臂基本功能評分項目包括安全開關功能、安全工作範圍設定(包括電腦端與手臂端)、電腦與手臂控制器的連線、按鈕開關及指示燈功能、電腦與手臂控制器確實連線、外部夾爪夾物/釋放控制、手臂移動控制、手臂定位控制、夾爪夾取/釋放物件控制、手臂原點復歸，以上手臂的控制均包括教導器操作控制及程式控制。

第二天上午競賽說明(機械手臂競賽平台之工件搬移精度控制功能測試：基本任務)

競賽選手使用機械手臂模擬軟體進行基本任務運動軌跡之規劃與模擬。當模擬之結果正確，再將模擬之程式透過網路線傳送到機械手臂後，使機械手臂以自動方式進行基本任務之實作。評分項目包括模擬結果任務完成性、手臂獨立動作任務完成性、及任務運行時間。

第二天下午競賽說明(機械手臂競賽平台之工件搬移精度控制功能測試：延伸任務一)

競賽選手使用機械手臂模擬軟體進延伸任務一運動軌跡之規劃與模擬。當模擬之結果正確，再將模擬之程式透過網路線傳送到機械手臂後，使機械手臂以自動方式進行延伸任務一之實作。評分項目包括基本任務之實機運行與延伸任務一模擬結果任務完成性、手臂獨立動作任務完成性、及任務運行時間。

第三天上午競賽說明(機械手臂競賽平台之工件搬移精度控制功能測試：延伸任務二)

競賽選手使用機械手臂模擬軟體進行延伸任務二運動軌跡之規劃與模擬。當模擬之結果正確，再將模擬之程式透過網路線傳送到機械手臂後，使機械手臂以自動方式進行延伸任務二之實作。此外，在競賽進行的前兩天，操作模擬軟體之選手並應利用時間逐步進行使用者介面之規劃及操作手冊的編寫，並於本評分時段進行自行設計之使用者介面的展示，以驗證所設計的使用者介面之實用性與親和性。使用者介面除具備適當且完整之任務操作介面外，並應能顯示機械手臂與週邊裝置之工作狀態。本時段之評分項目包括延伸任務二模擬結果任務完成性、運用人機介面呈現各個任務之實機運行、操作手冊呈現與說明。

任務舉例：

機器人所在地為一機械零組件加工廠的一條產線上，業者欲利用機械手臂協助完成經由鋸台所裁切的圓柱型工件之表面加工與裝入另一組合件中的工作。請設計工作枱面之機具設施配置(選手自行規劃並繪製產線配置圖)，使機械手臂依序完成以下工作：

1. 自給料區夾取圓柱型工件。
2. 將圓柱型工件移至打磨機進行加工，為期三秒鐘。
3. 將加工後之工件放入另一方型盒狀工件中。
4. 將裝有圓柱型工件的方盒移到半成品堆置區之料盤上。
5. 反覆進行以上工作，直到所有工件加工完成為止。
6. 工作結束後，應將機械手臂回歸到原點位置。

參、比賽要點

一、題目重點

本競賽參照國際技能競賽之實施方式，由兩位選手分工合作完成競賽。比賽要點在於訓練比賽選手即時創作應變的能力及程式規劃能力，故各任務的細節均不事先公布，而於競賽現場經由裁判長主持及裁判討論後於各階段任務開始前現場公布說明，故比賽選手須具備各種應變、創新與即時創作的能力。

二、比賽流程管控

1. 評分開始機械手臂啟動後，不得再對機械手臂所有的組件置換，亦不得要求暫停直到該場評分結束。
2. 比賽場所的照明、溫度、濕度、背景噪音…等，均為普通的室內環境程度，選手不得要求調節照明、溫度、濕度…等。唯若有明顯光害導致相機無法正常運作者，得在裝機日於工作崗位區域內進行必要之調整或措施。選手競賽期間不得要求進行工作櫃之任何調整。
3. 機械手臂不得有撞機情形 (包括碰撞工作櫃之本體或其他不應碰到的裝置)、或故意破壞比賽場地。若裁判發現機械手臂此項行為，將立即停止該次評分。情節嚴重者，裁判長得宣告該機械手臂退場，喪失比賽資格。
4. 比賽之開始、暫停、繼續、延長、結束與終止等均由裁判長下達指示，競賽之計時依裁判長指示同步進行。
5. 選手於比賽期間認有爭議時，應立即向裁判人員提出爭議處理。競賽結束後提出者不予受理。
6. 選手對比賽成績有異議時，應依【技能競賽實施及獎勵辦法】第 44 條於公告後三小時內，由選手本人以書面方式向大會提出，逾時提出者不予受理。

三、比賽成績判定

本競賽成績包括主觀判斷項目與客觀量測項目。各項目配分詳如評分表，將於競賽首日公告。

各任務運行時間之計算公式為：

運行時間得分 = 配分 × 該任務最快運行秒數 / 受評選手於該任務運行秒數

未圓滿達成任務者運行時間得 0 分。若比賽總成績相同，則以延伸任務二、延伸任務一、基

本任務、人機介面設計與操作手冊呈現、基本功能測試等項目的成績依序進行比序以決定名次。

四、安全注意事項

1. 參賽選手進入競賽場地應全程穿著安全鞋，長髮之選手並應將頭髮包束。**為維護選手安全，未著安全鞋者不得進入競賽場地。**
2. 參賽選手操作機械手臂或於工作枱工作時，一律要配戴護目鏡及戴上工作手套。但操作教導器時不得戴手套。
3. 機械手臂於 T1 (慢速教導模式) 以外模式工作時，參賽選手應避免進入手臂工作範圍，並應關上工作櫃之安全門。
4. **於裁判人員同意後，選手得自行切換機械手臂之 T1/T2/Auto 模式，唯應確實注意安全。**
5. 遇緊急狀況時，參賽選手應立即按下機械手臂緊急停止開關。
6. 參賽選手於機械手臂啟動裝配程序連接電源前，應確認電源插座輸出電壓規格與機械手臂的輸入電壓規格相符。在通電前，並應確認電壓規格及電路接線是否正確、牢固。
7. 在控制器連接任何裝置前，請務必確認控制器斷電。
8. 參賽選手離開工作崗位前，務必確認所有設備斷電。

五、違規事項

違反競賽試題中載明不得使用或不得進入競賽場地等情事或其他重大違規者，依試題規定處理。試題所載其他各項違規事項經裁判長召集裁判會議確認後判定，需以扣分處分，以該場總分之 10%為原則。若未出現在上述比賽規則和比賽辦法中之不良違規事項，經現場裁判長確認後可判定為違規行為亦須扣分處分。

肆、英文試題範例

worldskills Europe

EuroSkills Test Project

Robot Systems Integration (HP07)

Table of Contents

1.1 INTRODUCTION (C1) 3
1.2 INTRODUCTION – EDUCATION CELL (C-1) 4
1.3 INTRODUCTION – SAFETY (C-1) 5
1.4 DESCRIPTION – PARTS (C1) 7
1.5 DESCRIPTION – EQUIPMENT (C-1) 8
1.6 DESCRIPTION – I/O BLOCK (C-1) 10
1.7 DESCRIPTION – PC & SOFTWARE (C-1) 12
1.8 DESCRIPTION – ETHERNET (C-1) 12
1.9 DESCRIPTION - HMI (C-1) 13
1.10 DESCRIPTION - ROBOGUIDE / DIGITAL TWIN (C-1) 14
1.11 DESCRIPTION – DOCUMENTATION (C-1) 14
1.12 DESCRIPTION – RESERVED PROGRAMS (C-1) 14
1.13 INSTRUCTIONS TO THE COMPETITOR (C1) 15
1.14 INSTRUCTIONS – ROBOT SETUP – PAYLOAD DATA (C1) 15
1.15 INSTRUCTIONS – GRIPPER TEST (C1) 16
1.16 INSTRUCTIONS – BASIC TASK (C1) 17
1.17 INSTRUCTIONS – NUMBERING / SEQUENCE (C1) 18
1.18 INSTRUCTIONS – EXTENSION TASK (C2) 19
1.19 EQUIPMENT, MACHINERY, INSTALLATIONS AND MATERIALS REQUIRED (C-1) 20
1.20 MATERIALS, EQUIPMENT AND TOOLS SUPPLIED BY COMPETITORS IN THEIR TOOLBOX (C-1) 20
1.21 MATERIALS & EQUIPMENT AND TOOLS PROHIBITED IN THE SKILL AREA (C-1) 20
1.22 MARKING SCHEME (C-1) 21

Submitted by: Nigel Ramsden / FANUC Europe Corporation / 20-Aug-2021

INTRODUCTION (C1)

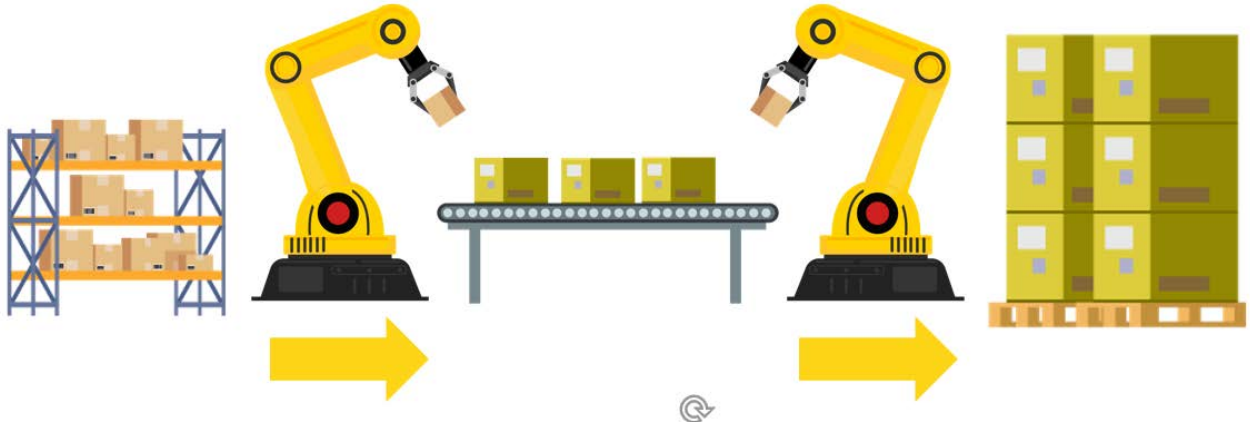

The project is to complete the Robot System Integration of a cell to Load and Stack Totes onto a Pallet ready for shipment. Normally this process would use several robots, but for the Test Project we will only use one !

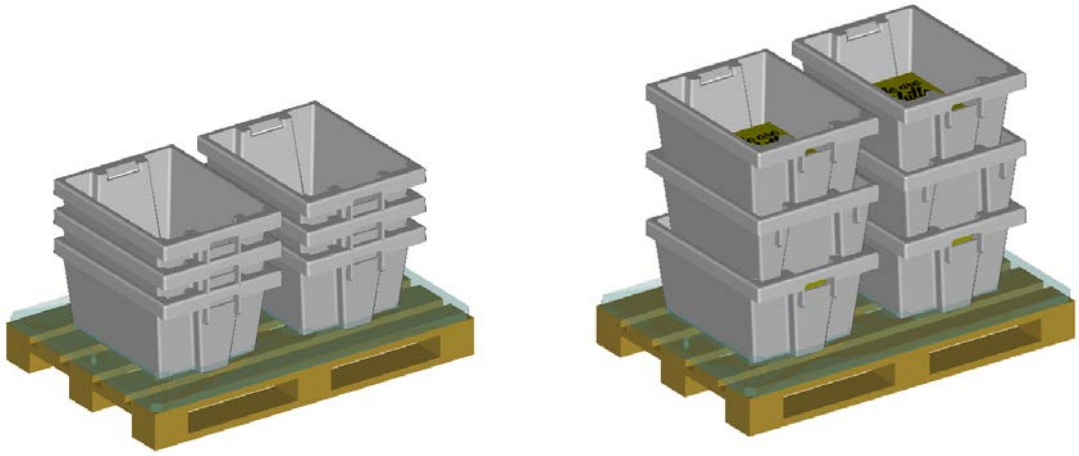

The totes must be loaded with specific numbers of packages of different sizes, 16mm or 19mm thick:

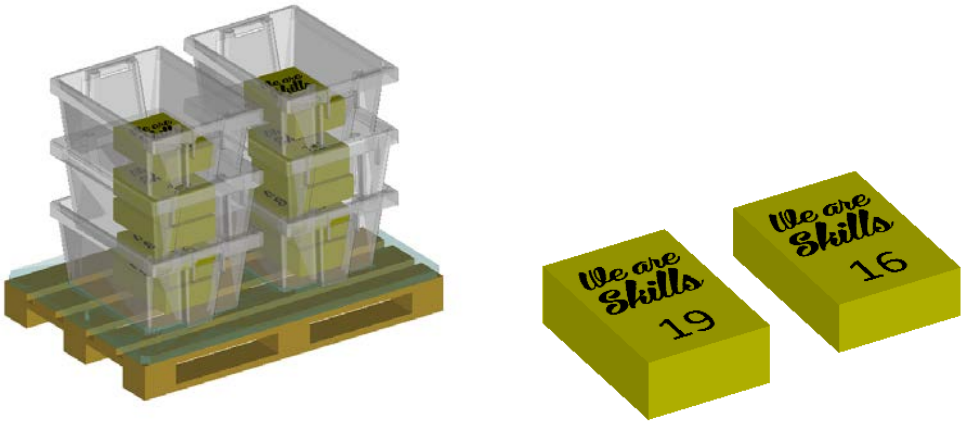

The project is divided into stages, setting up the robot & cell, completing the Basic Task and then attempting an Extension Task if the competitors have time.

INTRODUCTION – EDUCATION CELL (C-1)

The competition is based upon the standard FANUC Europe Education Cell:

The Education Cell is delivered 'ready to run' – there is no need for the competitors to physically install the robot or connect input power.

But the competitors must decide on the layout of the cell components and install, connect and configure all cell equipment.

INTRODUCTION – SAFETY (C-1)

- Each Expert is responsible for the safety of their team.
  Competitors bodies should not enter the cell while moving/programming the robot

OK	OK	NOK
Working in Cell **without** Teach Pendant / Servo OFF	Programming Outside Cell	Programming with TP Inside Cell

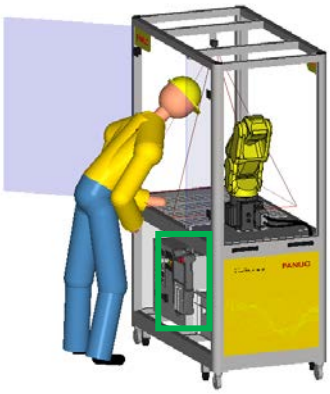

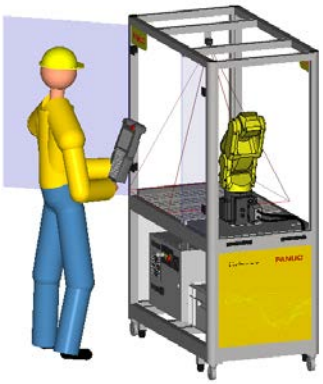

When installing, connecting peripherals etc, Servo power must be cut by E-Stop on Teach Pendant or Controller.

Competitors should not crowd around one another, especially in front of the cell door

OK

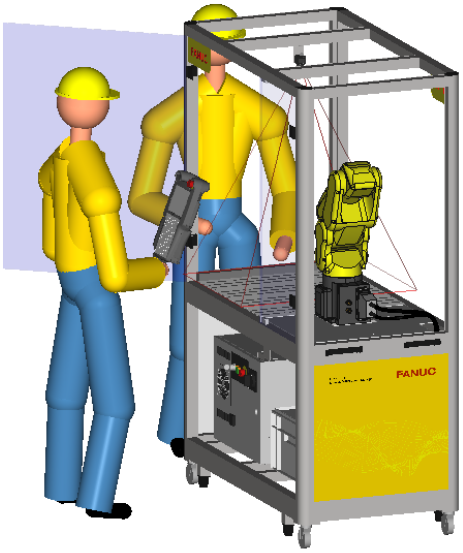

NOK

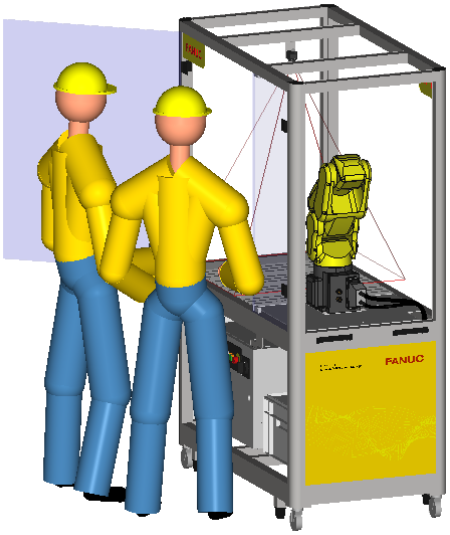

- AUTO/T1/T2 Switch

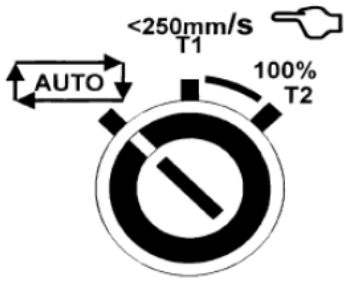

Competitors should do all setup / programming etc in T1 mode (<250mm/s)

For Test Run, Auto or T2 Mode can be used.

The Auto / T1 / T2 switch position must be changed by the Experts only.
The experts are responsible for the Auto / T1 / T2 key..

- Personal Protective Equipment

Safety shoes must be worn by competitors and experts while in the Competition Workshop. Safety glasses and gloves may be worn but are not required.

- Controller Access / Open Controller Door

There is no specific reason foreseen for the Competitors to open the controller door.

But in case competitors request, for instance to check a proper Ethernet connection, the door may be opened by FANUC Technical Support Staff or 2 non-compatriot Experts only.

Power must be turned off before opening controller !

OK

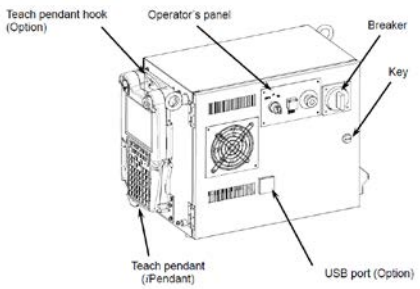

NOK

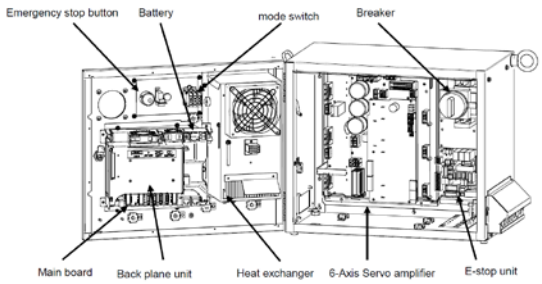

DESCRIPTION – PARTS (C1)

The necessary parts for the application are supplied:

Totes (6)

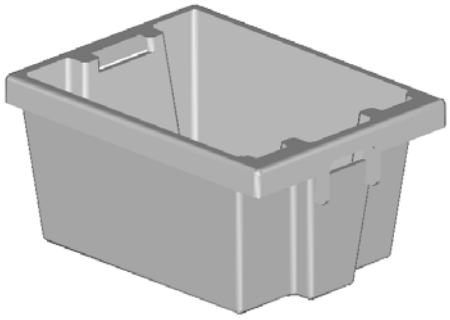

Packages (10 x 16mm & 10 x 19mm)

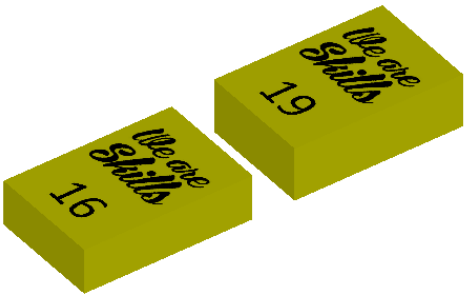

A Servo Gripper, with 2 fingers to be mounted on the Robot, which can be used to grip both the Totes and the Packages:

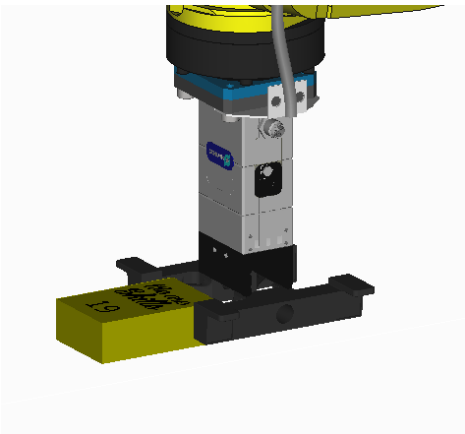

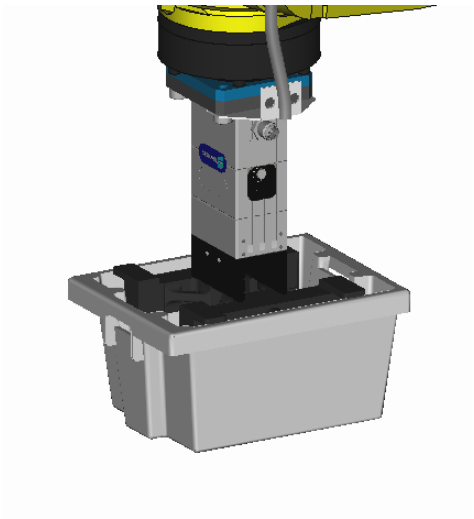

DESCRIPTION – EQUIPMENT (C-1)

The necessary equipment for the application are supplied:

Pallets (2), with Perspex pallet locators:

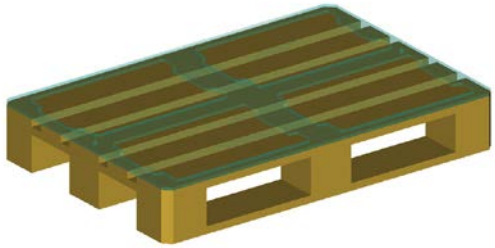

Conveyor, with 2 x Sensors for mounting at the ends of the conveyor:

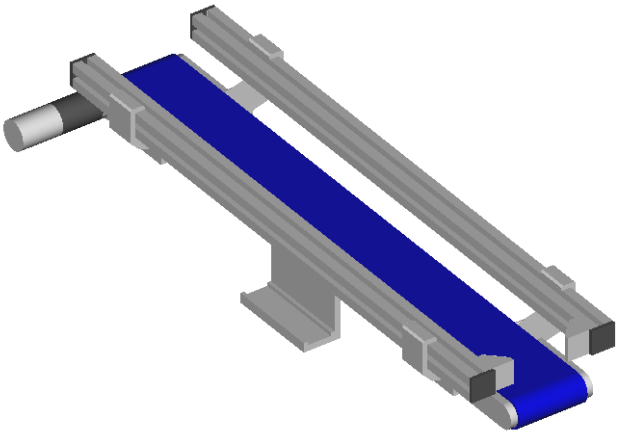

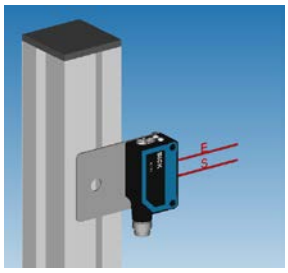

Magazines (2) for holding parts:

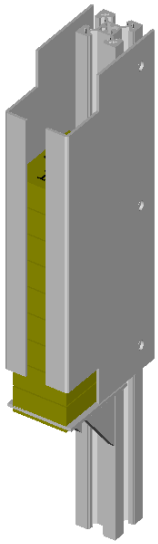

Different coloured LEDs to be used to indicate the Cell Status:

One is Red/Green (two outputs): the other is just Blue (one output):

(Plus some extension cables if desired)

Various support pillars for mounting the process equipment in the cell:

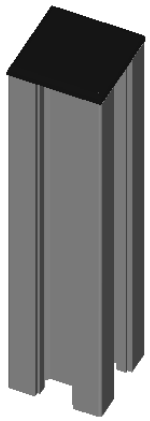

Competitors are supplied with 4 x pillars 200 long for mounting equipment.

Competitors may use as many or as few of the pillars as they wish.

DESCRIPTION – I/O BLOCK (C-1)

An I/O Connection Block is supplied to connect peripheral equipment:

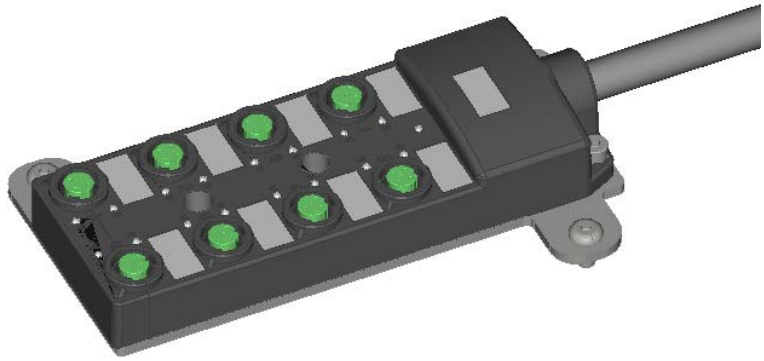

The I/O Block has sockets numbered 1 to 8 as shown below:

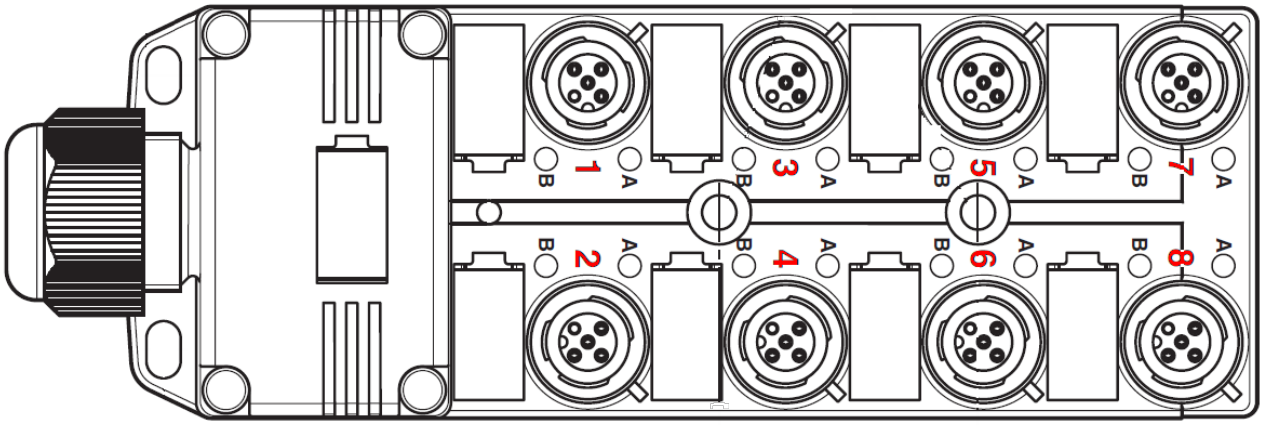

The robot I/O is pre-connected to the sockets as shown in the table below:

Socket	A (Pin 4)	B (Pin 2)
1	DI[101]	DI[102]
2	DI[103]	DI[104]
3	DI[105]	DI[106]
4	DI[107]	DI[108]
5	DO[101]	DO[102]
6	DO[103]	DO[104]
7	DO[105]	DO[106]
8	DO[107]	DO[108]

The Input and Output cables can be connected directly to the socket or via a Y-connector as shown below, to make the most efficient use of the available I/O. Plastic clips are supplied to clip cables to the table if needed – see examples below:

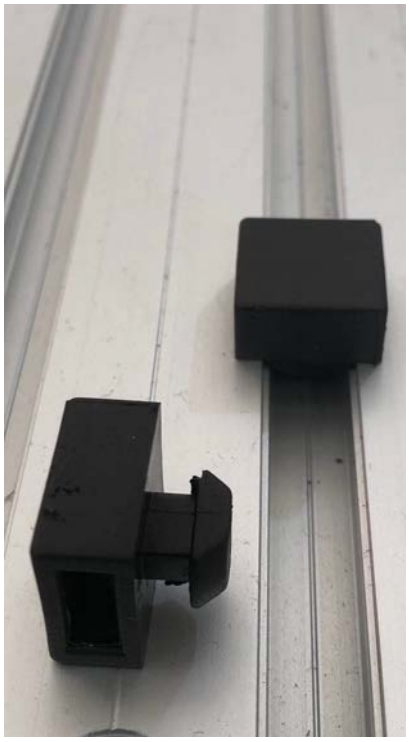

PLEASE NOTE THAT NO ELECTRICAL MODIFICATION OF CABLES OR CONNECTORS OR ANY OTHER COMPONENTS IS REQUIRED OR ALLOWED !

DESCRIPTION – PC & SOFTWARE (C-1)

One laptop is supplied, equipped with:

- Mouse
- Microsoft Windows.
- Microsoft Office: Word, Excel, PowerPoint, acrobat reader etc – for Documentation
- Microsoft Office Sharepoint Designer for Web Page construction
- Microsoft Internet Explorer for connection to Robot Controller
- FANUC Roboguide for Simulation (and template RG Cell)
- Payload checker
- One USB key for file transfer etc.
- Ethernet cable for connection to robot controller for file transfer, iRVision etc.

All necessary FANUC Manuals are also supplied in PDF form on the PC

- HTML Editor
- Manuals
- Payload Checker
- Roboguide

DESCRIPTION – ETHERNET (C-1)

An Ethernet cable is supplied to connect from Laptop to Robot for setup etc. There is Ethernet connection cable already installed in robot controller with external connector so there is no specific need to open the controller to make the Ethernet connection.

Note that Robot IP addresses & Subnet Masks should be set as shown below

PLEASE DO NOT USE OTHER VALUES !

Robot	IP Address Robot	IP Address PC	Subnet Mask
All	192.168.1.10	192.168.1.1	255.255.255.0

DESCRIPTION - HMI (C-1)

A template HMI (User Interface) file ES_GRAZ.STM is provided - This file should be loaded and set up so that it can be displayed on the Teach Pendant.

It should be possible to display it manually whenever the operator wants to display it, and it should be automatically when the main program is started in Automatic mode.

The minimum functions of the HMI should be:

- Display a Counter showing the number of the part being processed.
- Display the Open / Closed status of the Gripper
- Display the Error/Fault status of the Robot (equivalent to the Fault LED on the TP)

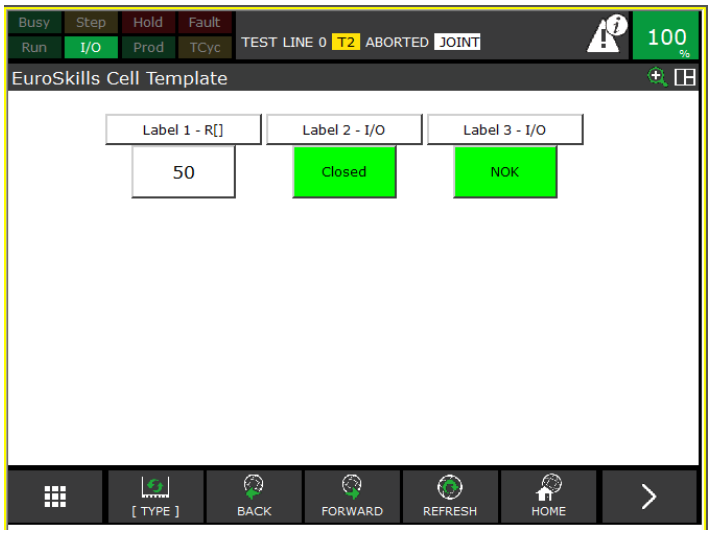

It is not enough to just load this file – it must be set up correctly with correct labels, I/O and Register values and Colours

You can use Microsoft Sharepoint designer or a text editor or any other function installed on your PC to modify it.

You may improve / extend this basic HMI as much as you wish.

For further information on the HMI / User Interface Setup please refer to the information on the standard Education Cell: FEC_Ed_Cell_Technical_V5_4.pdf

DESCRIPTION - ROBOGUIDE / DIGITAL TWIN (C-1)

Simulation plays an important role in this Skill.

Planning the layout of the cell

Creating the basic task program structure while the equipment is being installed according to the layout

Creating the extension task program structure while the basic task structure is being installed & tested

It is also important that any changes that are found during installation and testing are implemented in the Simulation as well as on the real cell – so that there is a Digital Twin of the actual cell – the layout, the programs – all aspects of the cell.

During marking it will be checked if the Roboguide simulation is really a Digital Twin and the real cell.

Don't forget also to make the Teach Pendant display as realistic as possible – for example with the 4D Graphics function

DESCRIPTION – DOCUMENTATION (C-1)

When you have finished the task, you should hand over a documentation package to the end customer.

This documentation should contain all the information necessary to run, maintain and troubleshoot the cell after you leave site.

You have been provided with a template document in English for the documentation package

The contents by the competitors do not need to be in English, but it would help the Marking Teams if at least the titles of the different sections of the documentation could be in English and own language.

DESCRIPTION – RESERVED PROGRAMS (C-1)

There are two reserved programs:

Z_HOME

Z_ZERO

These are for Fanuc Europe Corporation use – please do not use / modify / delete these programs

INSTRUCTIONS TO THE COMPETITOR (C1)

INSTRUCTIONS – ROBOT SETUP – PAYLOAD DATA (C1)

Item	Description	Mass (grams)
1	Total Mass of adaptor plates	60
2	Mass of gripper body	320
3	Mass of one finger	20
4	Mass of 16mm package	25
5	Mass of 19mm package	30
6	Mass of Tote	70
	Total for example	545

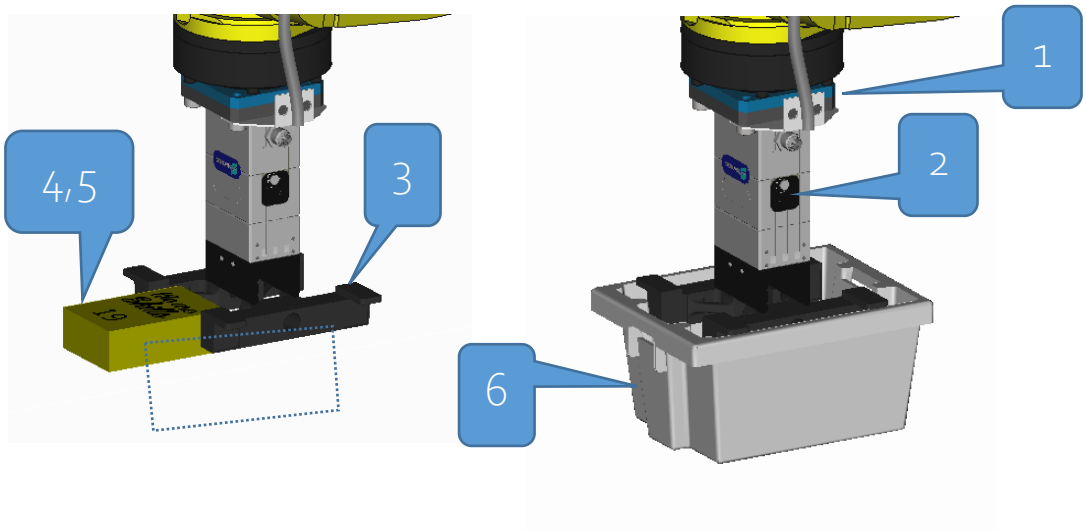

INSTRUCTIONS – GRIPPER TEST (C1)

First step of the Test Project is a simple test that the gripper is correctly set up and working

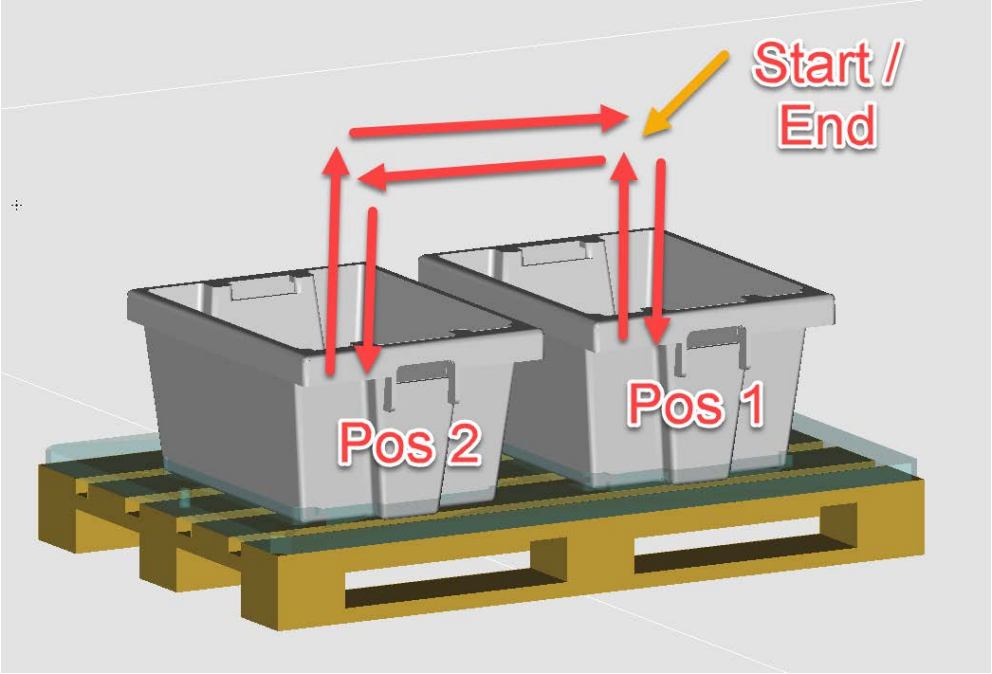

Program this sequence:

Step	Action
0	Start with one Tote (top part, bottom part or inner cylinder) in Position 1
1	Open Gripper
2	Move above Position 1
3	Move down to Position 1, close gripper, move up above Position 1
4	Move above Position 2
5	Move down to Position 2, open gripper, move up above Position 2
6	Move down to Position 2, close gripper, move up above Position 2
7	Move above Position 1
8	Move down to Position 1, open gripper, move up above Position 1
9	Repeat steps 1-8 for 3 cycles

Note – there is no marking for cycle time – just number of cycles completed successfully

INSTRUCTIONS – BASIC TASK (C1)

The Basic Task is to simulate the Automation of the Tote loading:

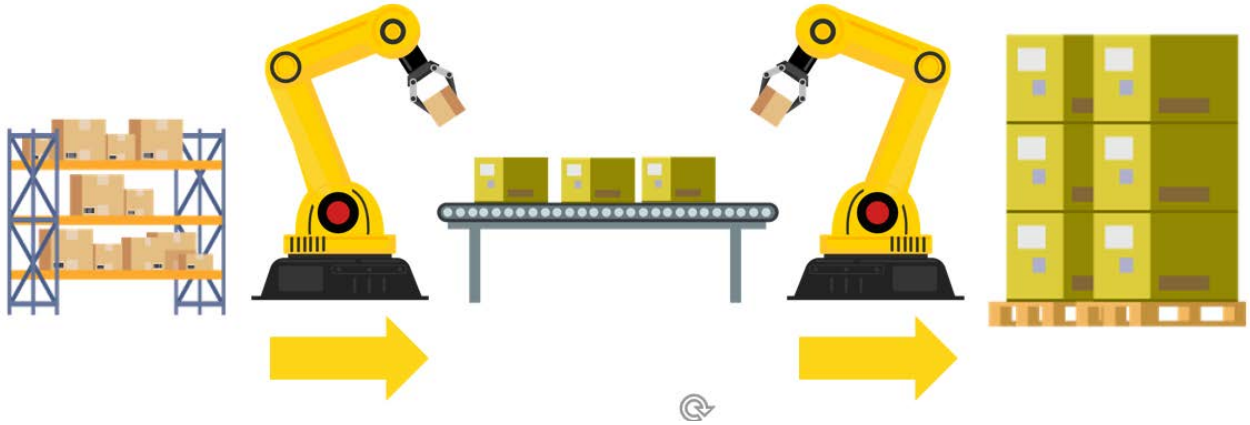

But instead of multiple robots, we will use only one robot.

The Basic Task starts with the Totes Stacked tightly together on one Pallet:

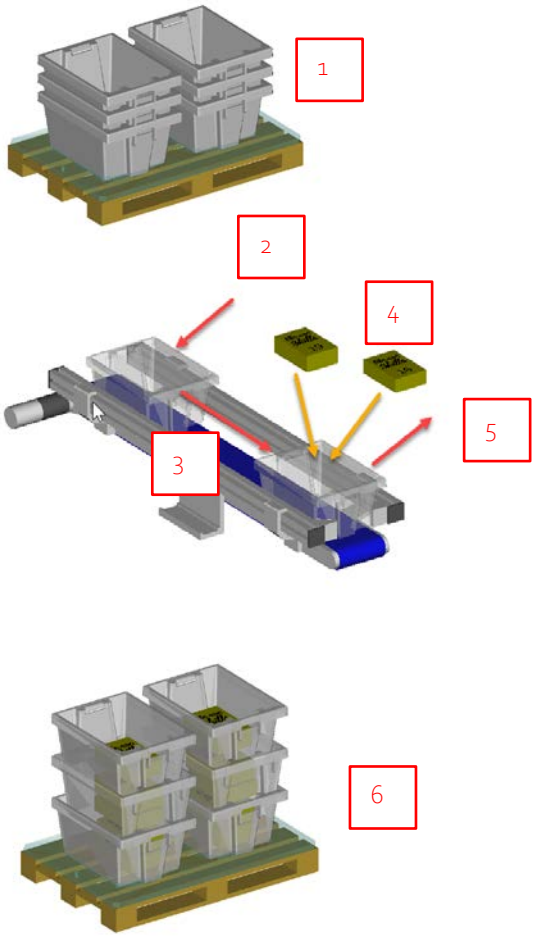

The Totes must be Unloaded from the Input Pallet [1] and Loaded onto on end of the Conveyor [2]. Then the Tote must be moved [3] to the other end of the Conveyor. When it reaches the end of the Conveyor the Packages [4] must be loaded into the Tote. When the Packages are loaded into the Tote it must be Picked [5] from the end of the Conveyor and Placed on to the Output Pallet [6].

Note that on the Output Pallet the Totes are stacked alternately

Sensors mounted on the Conveyor and on the Magazines must be used to check that the system is operating correctly.

Because only one robot is used, the layout will have to be chosen so that both pallets and the conveyor are inside the robot envelope.

INSTRUCTIONS – NUMBERING / SEQUENCE (C1)

The Tote Numbering is as shown below.

The Totes should be placed on the Pallet according to the numbering sequence shown:

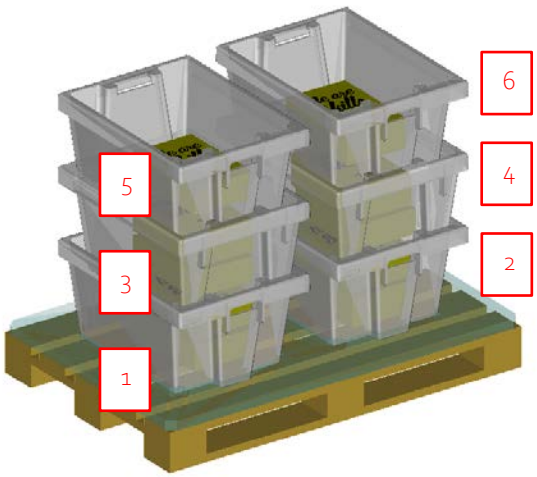

For the Basic Task the Packages should be loaded into the Totes as shown in the table below.
Some Totes have one package in, some Totes have two packages:

Tote #	Number to Load	
	Package 16	Package 19
1	2	0
2	0	2
3	1	1
4	1	1
5	1	0
6	0	1
Total	5	5

INSTRUCTIONS – EXTENSION TASK (C2) QR CODES

In the Basic Task, the number of packages to be loaded in each Tote is given in a table

For Extension Task 1, the number of packages to be loaded into each Tote must be automatically allocated according to a QR Code placed in the bottom of each Tote and detected by the Camera.

The rest of the sequence should be the same as in the Basic Task, but updated (eg HMI) for the QR codes

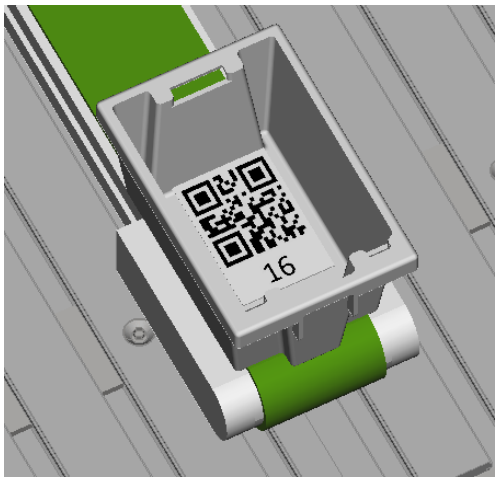

The codes are printed on laminated cards as shown below.

Only these 5 codes are used. Any other code should be handled as invalid.

For Marking, the Experts will insert the cards randomly into the Totes at the beginning of the Cycle

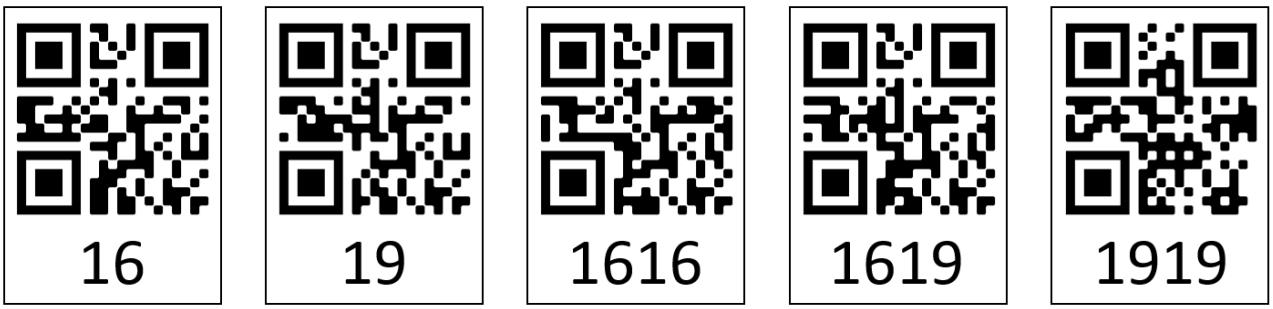

Example of invalid code:

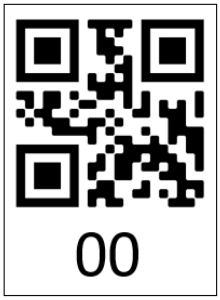

QR Code	Meaning
16	Load 1 x package 16
19	Load 1 x package 19
1616	Load 2 x package 16
1919	Load 2 x package 19
1619	Load 1 x package 16 & 1 x package 19
Any other code	Error

For information on the QR code function, please refer to
R-30iB_Plus_iRVision_reference_operator_manual_[B-83914EN_05], section 4.15 2-D BARCODE TOOL

EQUIPMENT, MACHINERY, INSTALLATIONS AND MATERIALS REQUIRED (C-1)

It is expected that all Test Projects can be done by competitors based on the equipment and materials specified in the Infrastructure Lists:

Inventaristool - Infrastructure List - HP7 - Robot Systems Integration (worldskills-europe.org)

MATERIALS, EQUIPMENT AND TOOLS SUPPLIED BY COMPETITORS IN THEIR TOOLBOX (C-1)

The Competitor PCs are equipped with US International standard Keyboards and basic mouse.

Competitors may bring their own keyboard and mouse to connect to the PC if they prefer. Hard-wired USB connections are recommended.The installation and functioning of these devices is the responsibility of the Competitors. It is permitted to install additional drivers if necessary, after approval by SMT.

Neither WorldSkills nor the Global Partner or PC supplier can guarantee the compatibility or functioning of the Competitor supplied devices.

The competitors may also bring a paper dictionary. The dictionary may not have been modified in any way – handwriting, additional papers etc. It will be checked on C-1

There should be no other tools or equipment required to complete the Test Project – these are all provided in the Test Project Kit & Tool Trolley, and competitors are prohibited from bringing other tools & equipment.

MATERIALS & EQUIPMENT AND TOOLS PROHIBITED IN THE SKILL AREA (C-1)

- PERSONAL LAPTOPS – USB – MEMORY STICKS– MOBILE PHONES

Competitors are only allowed to use memory sticks provided by the Competition Organizer.

Memory sticks or any other portable memory devices cannot be taken outside the workshop.

Memory sticks or other portable memory devices are to be submitted to the Chief Expert or to the Deputy Chief Expert at the end of each day for safe keeping.

Experts are allowed to use personal laptops, tablets and mobile phones in the Expert room only.

Competitors are not allowed to bring personal laptops, tablets or mobile phones into the workshop.

- PERSONAL PHOTO CAMERAS – VIDEO TAKING DEVICES

Competitors and Experts are allowed to use personal photo and video taking devices in the workshop at the conclusion of the competition only.

MARKING SCHEME (C-1)

Mark Summary Form (Draft – to be finalised in Graz) :

ID	Description	Day 1	Day 2	Day 3
A	Day 1 AM: Competitor 1: Setup Robot & Gripper (Payload, I/O etc) Home/Reference Positions & DCS. Demonstrate Running Gripper Test Program / Competitor 2: Import CAD, Create Cell Layout, Tools, Uframes. Demonstrate Reachability.	_____ 16.00		
A1	Install, Connect Setup Gripper : Mechanical, Cable, Electrical, I/O, Macro	_____ 3.10		
A2	Setup Tool(s) / Payload(s) : TCP Coordinates, Payload Values	_____ 2.00		
A3	Setup Reference Positions - Quick Master & Home. Setup DCS	_____ 2.20		
A4	Create Pick and Place Demo program to show proper robot & gripper setup. Run in Auto or T2.	_____ 3.00		
A5	Import CAD and Setup Roboguide Cell to match actual Cell layout accurately	_____ 0.70		
A6	Create missing CAD using Roboguide Modeller (wood blocks, pallets)	_____ 1.20		
A7	Check Reach & access in Roboguide - create demo program to demonstrate, including UTool(s), Uframe(s) etc	_____ 3.80		
B	Day 1 PM: C1: Install Equipment according to Roboguide Layout. Connect and setup I/O. Setup Tools and Frames / C2: Offline Program Basic Task, Connect Ethernet, set R[], I/O Comments from PC.	_____ 27.00		
B1	Complete all Mechanical / Electrical Installation according to Roboguide Layout. Label Cables, Frames etc	_____ 3.80		
B2	Complete I/O Setup, Comments, Macros, etc for all Electrical Equipment	_____ 2.90		
B3	Teach Tool(s) / Frame(s) - be prepared to show how this was done	_____ 2.60		
B4	Create Offline Programs for Basic Task - Program Structure	_____ 4.60		
B5	Create Offline Programs for Basic Task - Gripper / Robot Motion Control	_____ 6.40		
B6	Setup Host Comm & Comments for Registers - R[], PR[] etc	_____ 2.00		
B7	Follow correct Working Style & Safety	_____ 4.70		

C	Day 2 AM: C1: Install, Test Offline Programs. Demonstrate running Basic Task. / C2: Offline Program Extension Tasks. Day 2 PM: C1: Install Ext Task Offline Programs / C2: Create HMI from Template. Create User Documentation.		21.00	
C1	Demonstrate Basic Task running, measure cycle time. With Error Handling and HMI. Auto or T2		10.00	
C2	Check peripheral equipment control and error handling		4.00	
C3	Demonstrate Home Check UIF		2.30	
C4	Follow correct Working Style & Safety		4.70	
D	Day 3: C1: Load and Test HMI. Final Test, Demonstrate Running System / C2: Finalise , Demonstrate Documentation & Simulation - "Digital Twin"			36.00
D1	Demonstrate HMI (User Interface) and Setup / Display			7.70
D2	Demonstrate Extension Task running system demonstration			11.00
D3	Review User / Customer Documentation - Instructions and Reference Information			7.00
D4	Review TP Program Internal User Commenting: Headers, Logic, Positions, etc			3.80
D5	Review Roboguide "Digital Twin" - how realistic it is compared to real cell			6.50