注意：請自行列印本零件圖並攜至競賽場！（列入評分）

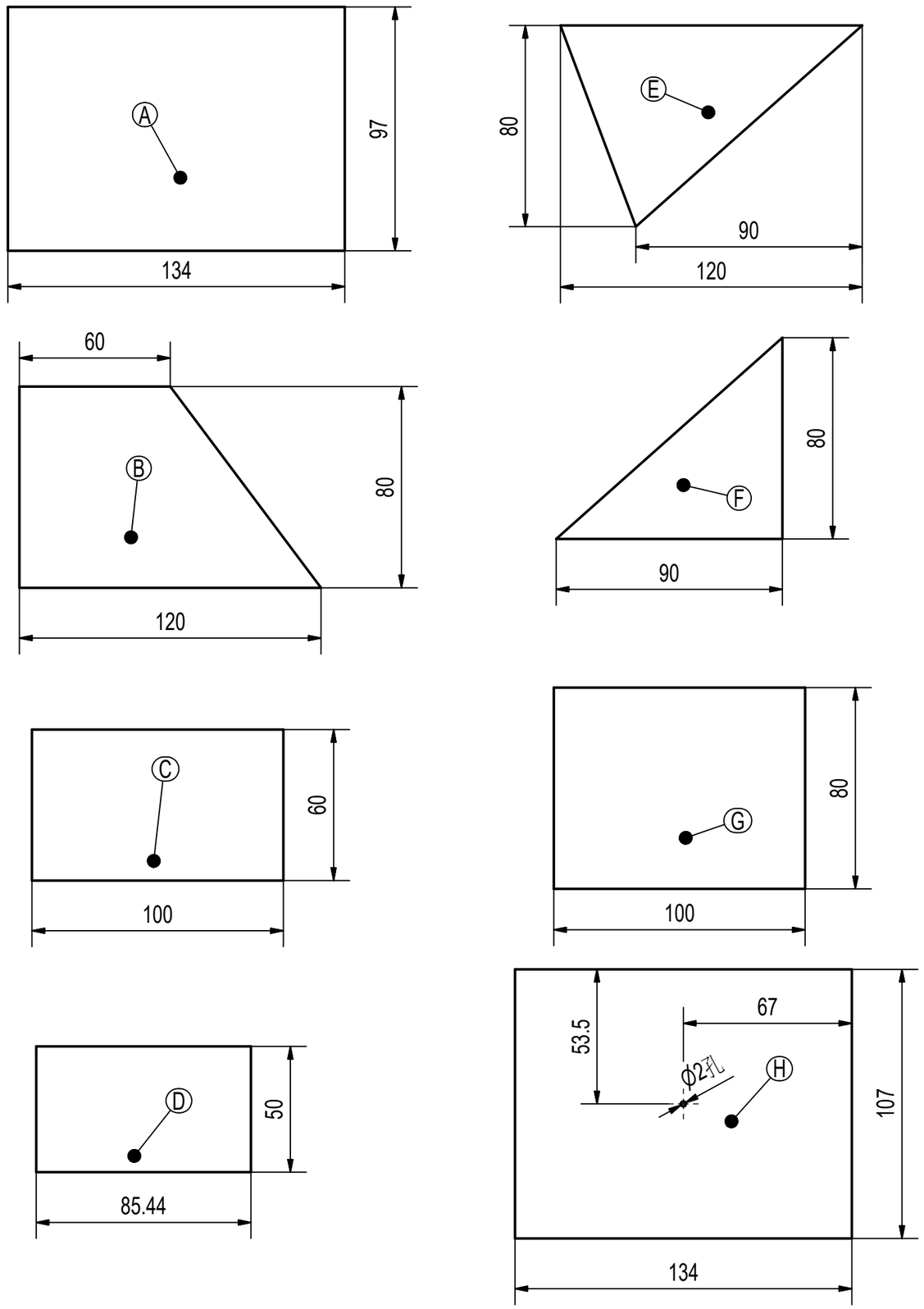

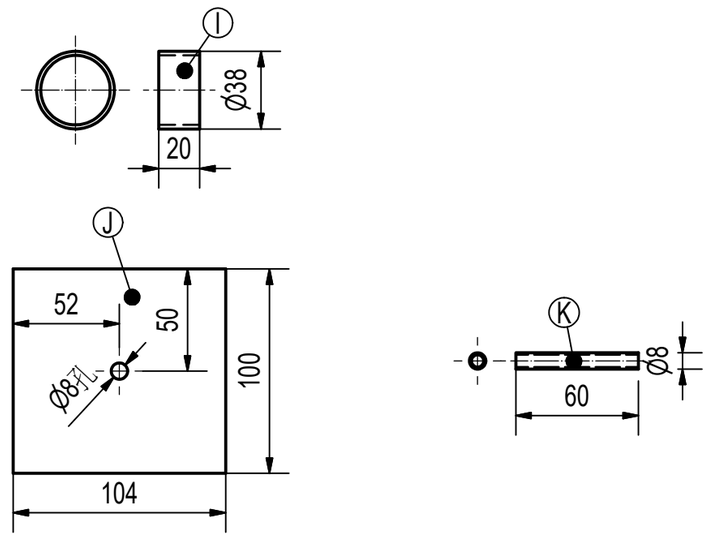

注意：除背吹管K管壁厚1.0mm外,其餘板件與管件之厚度均為2.0mm.
板件禁用剪床剪切！

零件號碼	數量	描述
K	1	Ø 8.0X60X1.0 AISI 304 STAINLESS STEEL TUBE (FOR PURGING)
J	1	104X100X2.0 AISI 304 STAINLESS STEEL SHEET (FOR PURGING), Ø 8.0 DRILL AS PER SKETCH
I	1	Ø 38X20X2.0 AISI 304 STAINLESS STEEL PIPE
H	1	134X107X2.0 AISI 304 STAINLESS STEEL SHEET, Ø 2.0 DRILL AS PER SKETCH
G	1	100X80X2.0 AISI 304 STAINLESS STEEL SHEET
F	2	90X80X2.0 AISI 304 STAINLESS STEEL SHEET, TRIANGLE CUT TO SHAPE
E	2	120X80X90X2.0 AISI 304 STAINLESS STEEL SHEET, TRIANGLE CUT TO SHAPE
D	2	85.44X50X80X2.0 AISI 304 STAINLESS STEEL SHEET
C	1	100X60X2.0 AISI 304 STAINLESS STEEL SHEET
B	2	120X80X60X2.0 AISI 304 STAINLESS STEEL SHEET, CUT TO SHAPE
A	1	134X97X2.0 AISI 304 STAINLESS STEEL SHEET

零件表

第52屆全國技能競賽試題		圖號	52NSC-SS-02
		比例	n.t.s
		競賽時間	2.5 hrs
職類	銲接(10-Welding)	命題人	陳志鵬
試題名稱	不銹鋼構件零件圖	投影法	ISO E

單位：mm